HANSA FLEX

TECHNICAL INFORMATION
HOSE TECHNOLOGY

WWW.HANSA-FLEX.DE/EN

Safety guidelines and information on the installation, operation, maintenance and inspection of HANSA-FLEX hydraulic hose lines

Table of contents

1. **ASSEMBLY**
1.1 Basic guidelines for the assembly of hydraulic hose lines
1.2 Additional information on the assembly of hydraulic hose lines

2. **OPERATION**
2.1 Commissioning and correct use of hydraulic hose lines
2.2 Storage of hydraulic hose lines
2.3 Additional information on the storage of hydraulic hose lines

3. **MAINTENANCE**
3.1 Inspection intervals for hydraulic hose lines
3.2 Inspection criteria for hydraulic hose lines
3.3 Repair and painting of hydraulic hose lines
3.4 Additional information on the maintenance of hydraulic hose lines

T

Hydraulic hose lines are capable of causing serious personal injury and environmental damage, but this danger is very often underestimated in practice. The wrong choice of hydraulic hoses or improper use of hydraulic hoses, hydraulic hose lines, fittings and accessories can impair the functional safety of the product and lead to failure and hence personal injury or material damage. In extreme cases, violently spraying oil and ruptured lines can even cause fatal injuries.

We therefore recommend most strongly that these safety guidelines are strictly observed!

The employer (operator of the machines) bears a particular responsibility.
This responsibility covers:

- the use of hydraulic hoses in accordance with their intended purpose
- scheduled monitoring and systematic control by a competent person with expertise in hose line technology (see e.g.: TRBS 1203 - persons qualified to carry out inspections)
- the identification and correction of faults
- the scheduled changing of hydraulic hose lines

This active assumption of responsibility is enshrined in the applicable legal framework. Based on the principles of industrial safety, the equipment and product safety act, the machine and pressure device directive and the ordinance on industrial health and safety, tasks are specified further and set out in procedural regulations for those concerned. Hydraulic hose assemblies are explicitly mentioned in this.

This guideline supplements the relevant domestic and international standards, guidelines and regulations which also have to be observed. It makes no claim to exhaustiveness.

1. Assembly

1.1 Basic guidelines for the assembly of hydraulic hose lines

In order to ensure the safe function of hydraulic hose lines and to avoid shortening their service life by excess strain, the following requirements must be satisfied:

- hydraulic hose lines may be assembled only by appropriately qualified personnel
- hydraulic hose lines must be installed in a serviceable position, free from obstructions and with freedom to move without abrasion or mechanical damage
- during operation hydraulic hose lines must generally not be subjected to tension, torsion or compression by external influences
- the minimum bending radius of the hose stipulated by the manufacturer must not be exceeded
- hydraulic hose lines must be protected against damage caused by external mechanical, thermal or chemical influences
- before starting operations, all connections (screw, flange, or plug-in) should be checked for tightness
- in the event of obvious external damage the hydraulic hose line must not be put into operation
- if necessary, the hydraulic hose line should be cleaned in a suitable manner before starting operation
- for hydraulic hose lines that require equipotential bonding in accordance with DGUV 213-060 T 033 (formerly TRBS 2153, or BGR 132), this should be checked and, if necessary, retrofitted.
- the hydraulic hose line length must be determined according to the installation conditions
- the possible shortening or lengthening under pressure indicated by the supplier or in the respective hose standard must be taken into consideration.

[Please note: operating conditions with simultaneous maximum working pressure, maximum temperature and minimum bending radius shorten the service life of hydraulic hose lines!]

1.2 Additional information on the assembly of hydraulic hose lines

1.2.1 Selection of the hydraulic hose line

The right choice of hydraulic hose lines is of crucial importance for safe and cost-effective operation of a hydraulic system. Criteria for the choice and design of the hydraulic hose line are:

- resistance to the medium – and not forgetting the cleaning processes!
- temperature resistance – check also the temperature/pressure behaviour!
- special ambient conditions and external influences
- pressure resistance, including required safety margins (also vacuum behaviour)
- nominal dimensions and the resulting flow velocities
- bending radii
- changes in length and external diameter
- exceptional loads due to external forces or pressure surges
- abrasion characteristics and possible protection
- availability of the hose as bulk goods and of the fittings
- installation conditions, e.g. movements, kinking, whipping, marking, offset angle of elbow fittings (see technical information on offset angles), section lengths
- safe seal shapes (sealing head form)
- required approvals

1.2.2 Media compatibility

The compatibility of the hose and fitting materials used with the media to be transported must always be tested. The surrounding media must also be taken into consideration in the selection.

T

1.2.3 Temperature and environment

Both operating and ambient temperatures must be taken into consideration when selecting a hydraulic hose line. If hydraulic hose lines are used outside their permissible temperature range, a significant reduction in their service life is to be expected.

HANSA-FLEX standard hydraulic hoses are generally designed, depending on configuration, for continuous operation in a temperature range from -40°C to max. +100°C (briefly up to 120°C). It is recommended that an outside temperature of 80°C should not be exceeded on a sustained basis. Specific temperature characteristics can be found in the data sheets.
Different temperatures apply for media differing from the standard application (e.g. compressed air or water).
At very low temperatures, rubber blends reach their „glass transition temperature“.

The glass transition temperature describes a temperature at which the elastic behaviour of the material is practically zero, i.e. the material becomes brittle and breaks like glass under mechanical load. A typical characteristic of a hydraulic hose line destroyed by glass transition are fine radial cracks in the surface of the hose inner and outer layer.
Due to the different expansion coefficients of the hydraulic hose line materials, the use of hydraulic hose lines at very low temperatures must be checked in relation to the medium and its properties.

Use under higher temperatures also shortens the service life of a hydraulic hose line, as rubber materials age prematurely as a result. However, the HANSA-FLEX range also includes hose types for higher temperature ranges.

In addition to ambient temperature considerations, the outer layer of a rubber hose is susceptible to environmental influences, such as ozone or strong UV radiation. Ozone and UV radiation can break down the chain molecules of the elastomer material. As a result, the material loses its elasticity. It becomes hard and brittle and breaks at points subject to higher loads, e.g. the outer radii. Characteristics of this behaviour are radial cracks that extend down to the braiding. In its range HANSA-FLEX therefore has special products with increased resistance.

1.2.4 Permissible pressure

The maximum working pressure (dynamic working pressure) determines the structure and the choice of the hose. Depending on the application, hoses are available with textile braiding, with wire braiding, with wire spiral inserts or also as special hoses made of metal or PTFE.
The maximum operating pressure of a hydraulic hose line is determined by the individual operating pressures of the components (hose or fitting). The lower operating pressure applies in each case.

1.2.5 Nominal sizes

In a hydraulic system, the hose or pipe inside diameter plays an important role. When a liquid flows through a line, it undergoes a pressure loss that depends on the volume of flow, the roughness of the inner wall, the line length, the inside diameter, the specific gravity of the liquid and its flow velocity. Also to be observed, however, is a „starting distance“ which has a significant influence on the velocity distribution. Pressure losses also occur when the liquid flows through fittings, valves, elbows and other restrictions.
The general rule is that in order to minimise losses, the inside diameter of the pipe / hose should be appropriately sized. If in doubt, decide in favour of the next-larger diameter. This reduces the flow velocity, and hence also the pressure losses in the line.

T

1.2.6 Torsion

Care should be taken to prevent excessive twisting of hydraulic hose during installation. Twisted hose lines significantly reduce the service life due to the internal rubbing of the wire braids or spirals when the hose flexes during operation. Under pressure pulses the plies try to return to their neutral starting position. A particular load occurs in the area of the connection.

Wrong

Right

For example: a twist of 7° reduces the service life by 80%. Attention should therefore always be paid during installation to ensure that the hydraulic hose line is not twisted in itself, e.g. when tightening the union nuts.

1.2.7 Minimum bending radius

A permissible bending radius is prescribed for each hose type, depending on its nominal size. If the minimum bending radius is exceeded, the service life and the load-bearing capacity of the hydraulic hose line is reduced. Exceeding the bend radius has two failure modes:
1) the outside bend creates gaps in the wire braid or spiral reducing the pressure resistance. 2) the inside bend creates a situation where the wire plies are compressed and start to overlap which also reduces the pressure rating. Exceeding of the minimum bending radius occurs particularly immediately behind the connection when a hose is bent too sharply.

Wrong

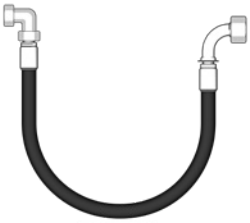

Right

If installed bent, the hydraulic hose line length should be selected so that the design bend of the hose only begins after a length of 1.5 times the outer diameter (1.5 x d). If necessary, kink protection should be provided.

Wrong

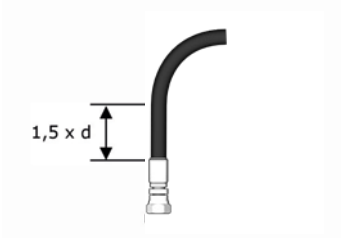

Right

In some cases it is also possible to avoid exceeding the minimum bending radius by the use of suitable fittings.

T

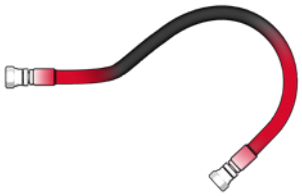

Wrong

Right

Attention: sudden failure of a hose line can allow hot high pressure hydraulic oil to escape and cause serious machine damage or worse human injury from burns, oil injection wounds, or death. In such cases, switch off the machine immediately. Do not ever come in direct contact of pressurized fluids escaping a failed hose. They can immediately penetrate the human skin and spread inside the body! Hydraulic liquids may be contaminated with bacteria which in such cases can result in serious or even fatal blood poisoning. Due to their small size and high pressure such injuries might not even be noticed because no pain is felt.

!! Consult a doctor immediately if hydraulic oil has penetrated human tissue!!

1.2.8 Abrasion

If a hose is laid over a sharp edge, the outer layer can wear through due to the movement of the hose during operation.

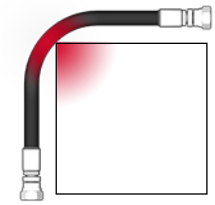

Wrong

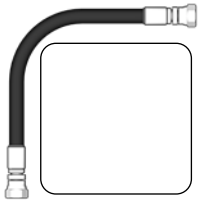

Right

The same applies to hoses that are laid too close together. The hoses rub against one another. The wire braiding is no longer protected against corrosion and failure of the hose is only a question of time. If it is not possible to keep hoses from rubbing each other, it is possible to use hoses with highly abrasion-resistant outer covers.

1.2.9 Tensile load

Tensile loads on hydraulic hose lines must be avoided, as this endangers the secure connection to the fittings. Please note that hydraulic hose lines can shorten under pressure (by up to 4% under maximum permissible working pressure), so that they should always be laid with a certain amount of slack. Possible movements of the hydraulic hose lines must also be considered.

Wrong

Right

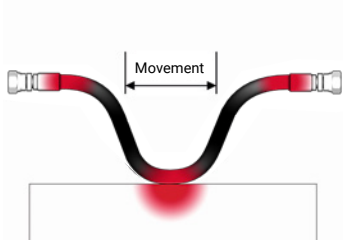

Wrong

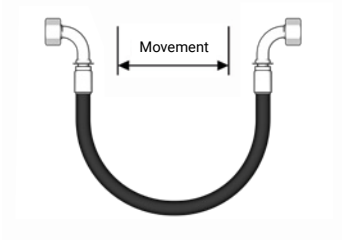

Right

***Note:** with certain applications, e.g. forklifts with spring-loaded tensioner rollers, tensile loads cannot be avoided. In such cases the permissible operational loads must be agreed upon with HANSA-FLEX.

1.2.10 Hose mounts

Hose clamps should not be used where they hinder the natural movement and change in length of the hose. The outer layer will be destroyed in the long term by the rubbing movements in the holder. Hose clamps should therefore only be installed on straight sections.

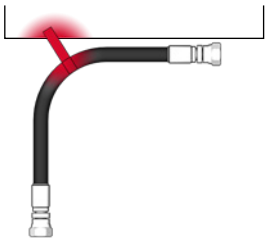

Wrong

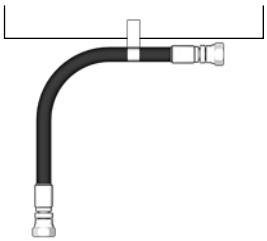

Right

1.2.11 Whipping

If damage to a hydraulic hose line is likely to present a hazard due to whipping, the hydraulic hose line must be restrained or shielded. Hazardous whipping in the event of a hydraulic hose line tear off can be prevented by design engineering measures. The HANSA-FLEX Stopflex or StopLock safety system that permits a safe connection between hose and machine parts is particularly suitable for both proactive installation and retrofitting.

1.2.12 Leaks

If damage to a hydraulic hose line creates a hazard due to the escape of the pressurised medium, the hose must be shielded. The HANSA-FLEX TGF ISO protective hose can also be used for shielding.

1.2.13 Gases and vapours

When selecting the hose attention must be paid to permeation or effusion, i.e. the possible penetration of the gas molecules through the inner layer. Media losses or undesirable concentrations of gases or gaseous fuels are the result. These gases are potentially flammable, explosive or toxic. A selective discharge of possible gas concentrations below the outer layer can be achieved by pricking, as employed e.g. for compressed air lines above 16 bar or for hot water hoses.
The use of flammable and toxic gases as a medium in HANSA-FLEX hydraulic hoses is generally not recommended. Please consult HANSA-FLEX about possible alternatives.

1.2.14 Hoses for conveying flammable products

Most countries have regulations regarding the storage and transport of flammable products including liquid hydrocarbons (petrol, paraffin and diesel fuel) and liquefied petroleum gas (LPG) as they are hazardous products. Hoses and hose lines for this area also have to meet special requirements. Please consult HANSA-FLEX about suitable products.

As a precaution, we would like to point out that hydraulic hose lines are intended for use in hydraulic systems and that HANSA-FLEX cannot make any general statement on the conveyance of flammable products through hydraulic hose lines or hydraulic hoses.

2. Operation

2.1 Commissioning and correct use of hydraulic hose lines

Before commissioning, the tests prescribed by the relevant laws and directives (e.g. acceptance test, pressure test, etc.) and technical, organisational and personal protection measures have to be carried out. Technical and organisational measures always have priority. If all the hazards can nevertheless not be ruled out, effective personal protection equipment must be provided and used. The operator must test the suitability of the hydraulic hose lines and their components with respect to the operating parameters, such as operating temperature, vacuum, pressure and material resistance. Where abrasion is possible, wear of the hydraulic hose line must be assessed and examined.

2.2 Storage of hydraulic hose lines

- Store in cool, dry and dust-free conditions. Protect from direct sunshine and/or UV radiation. Shield from nearby heat sources. Hydraulic hoses and hydraulic hose lines must not come into contact with substances that cause damage
- Store hydraulic hoses and hydraulic hose lines horizontally in a stress-free and kink-free condition. When stored as rings, the radius must be not smaller than the minimum recommended by the manufacturer. (Exceptions are possible according to the specifications of the hydraulic hose manufacturer)
- Hose ends should be sealed with caps to protect the inside of the hose from dirt, ozone and corrosion
- Maximum storage period in accordance with DIN 20 066 recommendations: 4 years for hoses and 2 years for hydraulic hose lines
- Metal and PTFE hose lines must be protected in particular from exposure to chlorides, bromides, iodides and from rust

2.3 Additional information on the storage of hydraulic hose lines

2.3.1 General

Poor storage conditions and improper handling of the hoses could result in shorter service life and/or change their physical properties. The changes can be caused by the effects of e.g. oxygen, ozone, heat, light, moisture, solvents or storage under strain. Properly stored and handled rubber products retain their properties almost unchanged over a long period of time (several years).

2.3.2 Storage area

Hydraulic hose lines should not be stored outdoors, even when protected from the weather. They must not be stored together with lubricants, chemicals, solvents, fuels, acids, disinfectants and the like. The storage room should be dry, cool, dust-free and moderately ventilated.

2.3.3 Temperature

The temperature for storing rubber products should be between -10° C and +15° C. Other storage temperatures, such as up to +25° C, must be agreed with HANSA-FLEX. Temperatures above this can only be tolerated for a short time.

2.3.4 Heating

In the case of hydraulic hose lines, direct heat exposure must be avoided, so in heated storage rooms shielding must be provided or a minimum distance of 1 m must be maintained.

2.3.5 Moisture

The relative humidity in the storage rooms should be max. 65% and there should be no condensation.

2.3.6 Lighting

Direct sunlight and strong artificial light with a high ultraviolet content should be avoided when storing rubber and rubber products.

2.3.7 Oxygen and ozone

Exposure to ozone impairs the service life of hydraulic hose lines, so there must be no ozone-generating fixtures such as electric motors or other spark-generating machines in the storage room.

3. Maintenance

3.1 Inspection intervals for hydraulic hose lines

The inspection intervals for hydraulic hose assemblies must be determined by the operator according to the specifications of national ordinances and regulations and the ordinance on industrial health and safety, as well as within the framework of risk assessment according to § 3 of the ordinance. The safe working condition of hydraulic hose assemblies must be checked, for example, by a competent person as defined in § 2 Section 6 of the ordinance (§§ see German BetrSichV):

- before commissioning
- at regular intervals after commissioning (recommended e.g. for thermoplastic and elastomer hydraulic hose lines at least 1x per year. More severe loading due e.g. to higher mechanical, dynamic, thermal or chemical loads requires shorter inspection intervals)
- after repairs
- after major modifications (overhaul) of the machine
- after accidents or after longer periods of non-operation
- etc.

T

3.2 Inspection criteria for hydraulic hose lines

The safety regulations for hydraulic hose lines from the Federation of Institutions for Statutory Accident Insurance and Prevention (DGUV 113-020) and the currently valid issue of DIN 20066 and ISO/TS 17165-2 stipulate that the function of hydraulic hose lines must be assessed at intervals to be stipulated. The relevant rules clearly specify the criteria for replacement of hydraulic hose lines. Hydraulic Hose lines must be replaced if the following damage is discovered during an inspection:

- damage to the outer layer down to the ply, e.g. by abrasion marks, cuts or cracks
- brittleness of the outer layer or cracking of the hose material
- deformations not consistent with the natural form of the hose or hose line, both in pressure-free and pressurised state or during bending (e.g. delamination or blistering)
- leaks
- damage or deformation of the hose fitting (sealing function impaired); minor surface damage is no reason for replacement
- hose becomes detached from the fitting
- fitting tightness and function impaired by corrosion
- requirements for the installation not observed (e.g. to DIN 20066)
- storage and/or service period of the hose or hose line exceeded

National ordinances and regulations must be observed

3.3 Repair and painting of hydraulic hose lines

A repair of the hydraulic hose line involving the continued use of the installed hose and/or fitting (integration area) is not permitted. Recoating of hydraulic hose lines violates the identification requirement.

3.4 Additional information on the maintenance of hydraulic hose lines

3.4.1 Cleaning the outer layer

For information on cleaning hydraulic hose lines from the outside, please refer to the currently valid version of DIN 7716.
Cleaning the outer layer of hydraulic hose lines should be done with warm water and a little soap. The remains of the cleaning fluid should be rinsed off with water. Effective and particularly gentle cleaning agents are recommended. Solvents that are corrosive or aggressive to elastomers and thermoplastics should not be used. When choosing cleaning agents, make sure that they are compatible with the hydraulic hose material, the materials of the fittings and their coatings.
Hydraulic hose lines must not be cleaned with sharp-edged objects or tools.
Drying after cleaning should be done at room temperature.

If there is a silicone-free requirement, we wish to point out that separate manufacturing, cleaning and storage processes are necessary.

3.4.2 Service life

The currently valid issue of DIN 20066 stipulates as follows:
Even with proper storage and admissible loading, hydraulic hoses and hydraulic hose lines are subject to natural aging. Their service life is therefore limited. Improper storage, mechanical damage and overloading are the most frequent causes of failure. In individual cases, the service life can be defined on the basis of empirical values and in deviation from the following indicative values:

- the hydraulic hose material (bulk hose) should not be older than four years old when the hydraulic hose line is produced.
- the service life of a hydraulic hose line, including a possible storage period of the hydraulic hose line, should not exceed six years.
- the storage period of the hydraulic hose line should thus not exceed two years.

The following diagram illustrates this principle:

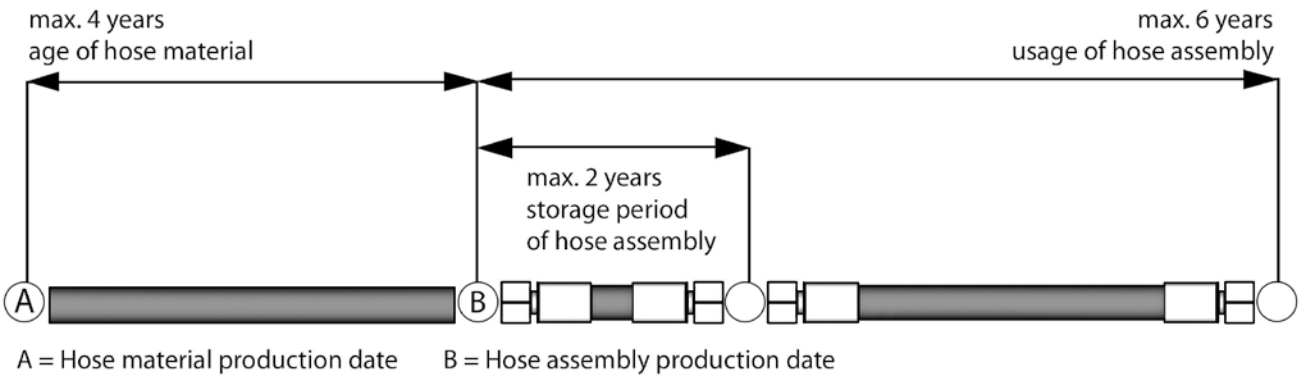

In practice, hydraulic hoses are stored according to the First In-First Out (FIFO) principle. FIFO defines a storage principle where the date of storage determines the date of retrieval from storage. This means that the hose that has been in storage longest is retrieved from storage first.

Information on the storage and service life of hydraulic hose lines can be found in the following publications:
- DIN EN ISO 8331, Point 1 4.2 Storage conditions
- ISO 17165-2, Point 9 Storage
- DIN EN ISO 4413, Point 5.4.6.5.1 - Hose lines (general requirements)
- DIN 20 066, Point 14.1.2 - Storage and service life (recommendation)
- DIN 7716, Rubber and rubber products: requirements for storage, cleaning and maintenance
- DGUV 113-020: Hydraulic hoses and hydraulic fluids, rules for safe use, e.g. Point 4.5.1 the service life of hydraulic hose lines

T

Assembly with offset angles

Hose lines with elbow fittings and offset angles (K and V)

DIN 20066 has defined the requirements for „hose lines with two offset angles“ in addition to the requirements for „hose lines with one offset angle“.
The additional designation uses the term offset angle K or K-angle.

The K-angle is necessary to be able to uniquely describe the following hose lines:
Both elbow fittings do not follow the natural curvature of the hose.

HANSA-FLEX made comply with DIN 20066 in this respect.
All hose lines should be referenced in compliance with the standard. This will provide a basis for unambiguous documentation and ordering.

All the possible configurations using the familiar offset angle V or V-angle and the standard defined K-angle are described below and clarified with examples.

E**xample 1: Hose line with one or two elbow fittings and no offset angle**

If the hose line is manufactured with one or two elbow fittings that follow the natural curvature of the hose, then there is no offset angle.

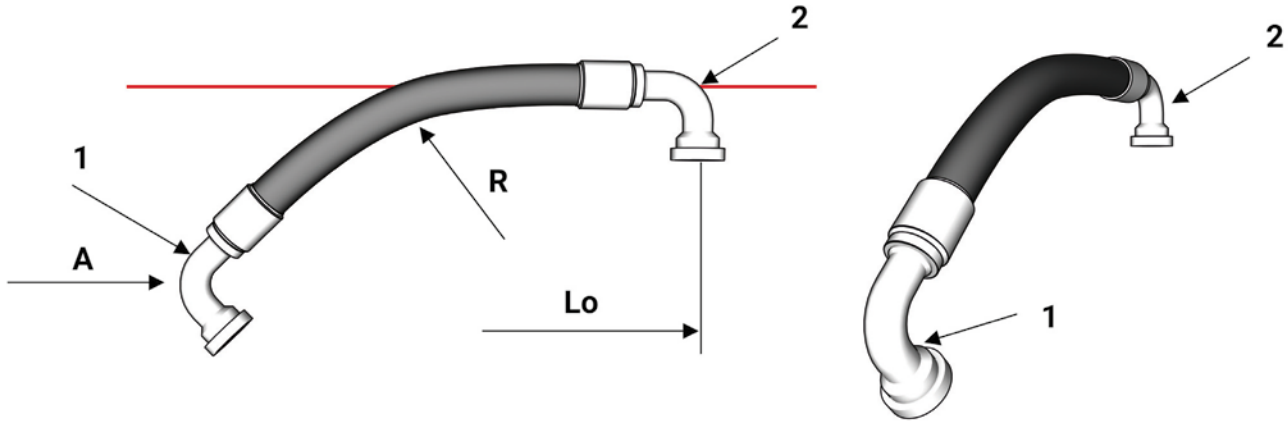

Figure 1

Legend:
1 First-mentioned hose fitting PN20SF90
2 Second-mentioned hose fitting PN20SF90
A Direction of view **(always onto the first-mentioned fitting)**
R Natural curvature of the hose
LO Length of the hose line

Figure 1: Designation of a hose line HD220: **PHD220 x 1000 SF90**

Example 2 (V-angle): Hose line with two elbow fittings and one offset angle

If the second-mentioned elbow fitting (at the rear) is fitted offset to the first-mentioned fitting, not following the natural curvature of the hose, then the offset angle V must be given for the rear fitting. The angle is measured counterclockwise. The same procedure is used if the first-mentioned fitting is straight (e.g.: PN20SF).

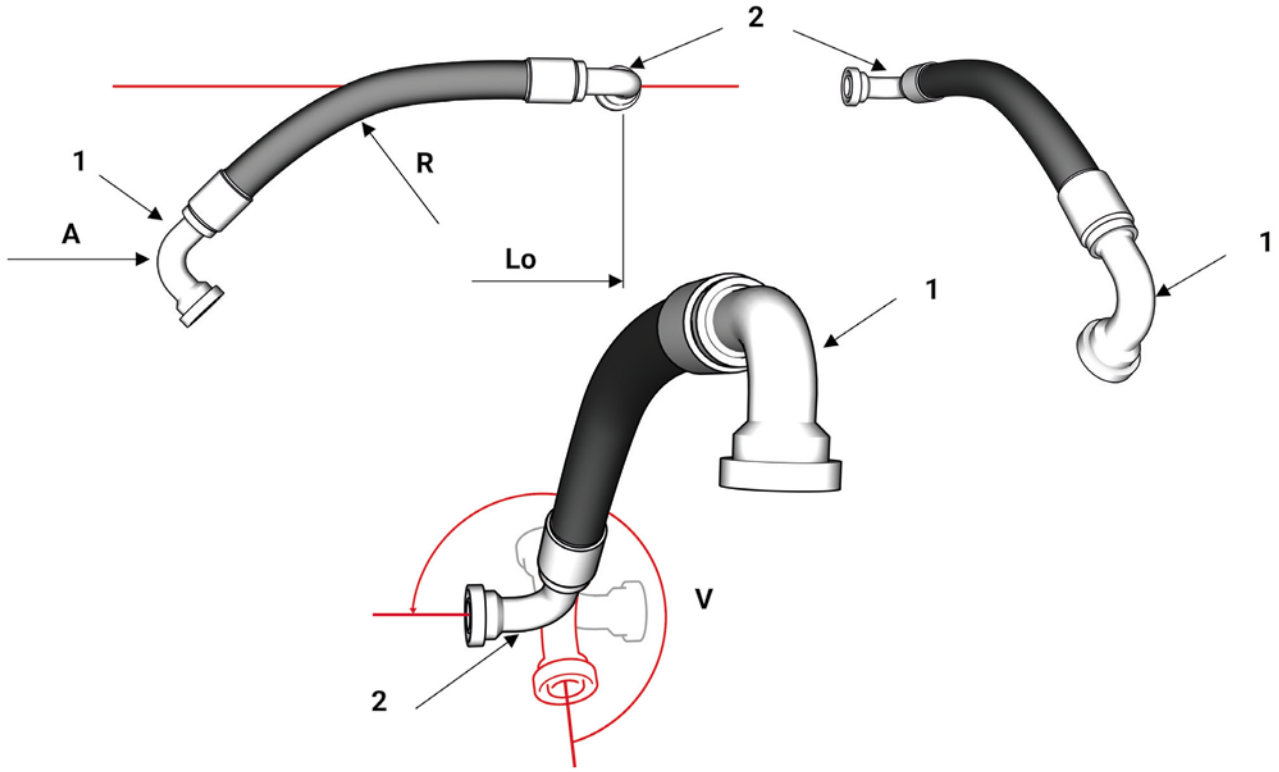

Figure 2

Legend:
1 First-mentioned hose fitting PN20SF90
2 Second-mentioned hose fitting PN20SF90
A Direction of view **(always onto the first-mentioned fitting)**
R Natural curvature of the hose
V Offset angle, measured counterclockwise, in this case 270°
LO Length of the hose line

Figure 2: Designation of a hose line HD220: **PHD220 x 1000 SF90 V270**

T

Example 3 (V-angle): Hose line with one elbow fitting and one offset angle

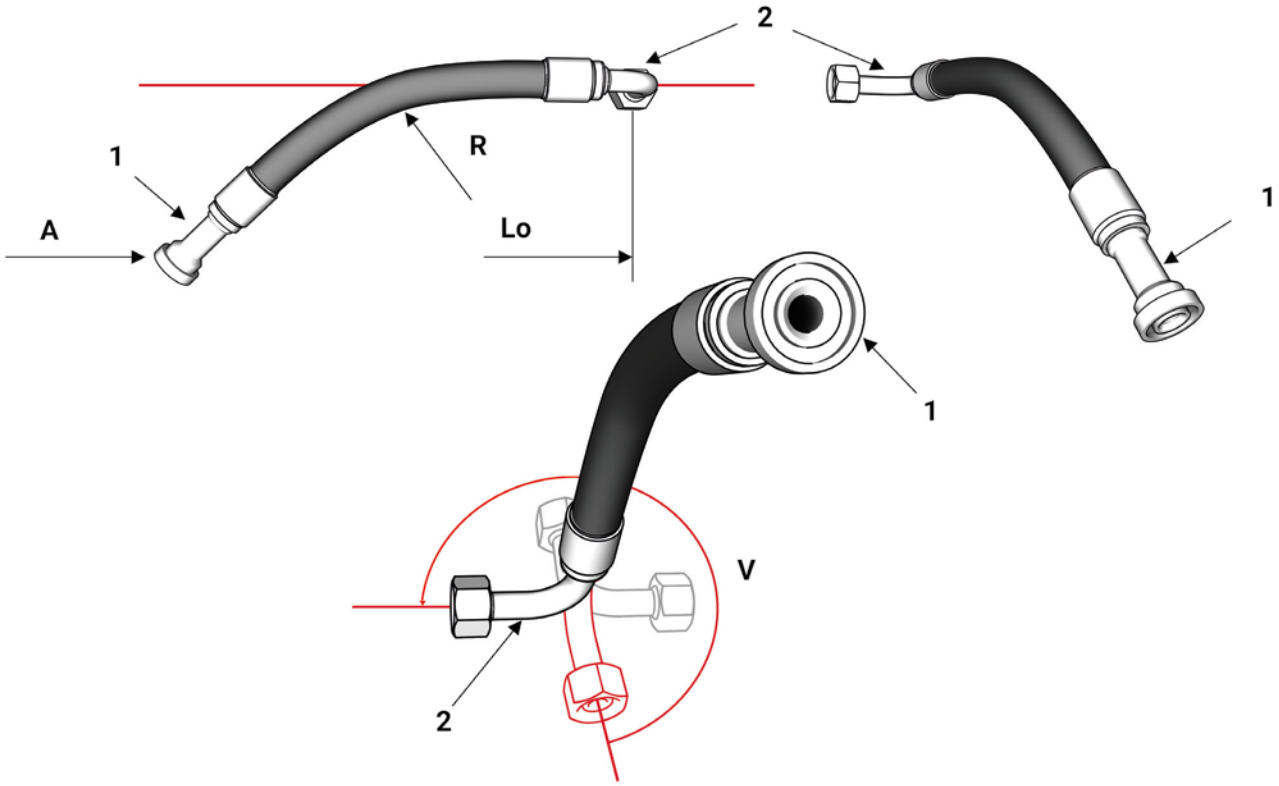

Figure 3

Legend:
1 First-mentioned hose fitting PN20SF
2 Second-mentioned hose fitting PN20AOL90
A Direction of view **(always onto the first-mentioned fitting)**
R Natural curvature of the hose
V Offset angle, measured counterclockwise, in this case 270°
LO Length of the hose line

Figure 3: Designation of a hose line HD220: **PHD220 x 1000 SF AOL90 V270**

Example 4 (K-angle and V-angle): Hose line with two elbow fittings and two offset angles

If both elbow fittings are fitted not following the natural curvature of the hose (Figure 4 and 5), theoffset angle of the first-mentioned elbow fitting relative to the curvature of the hose is added. This angle is designated as the K-angle.

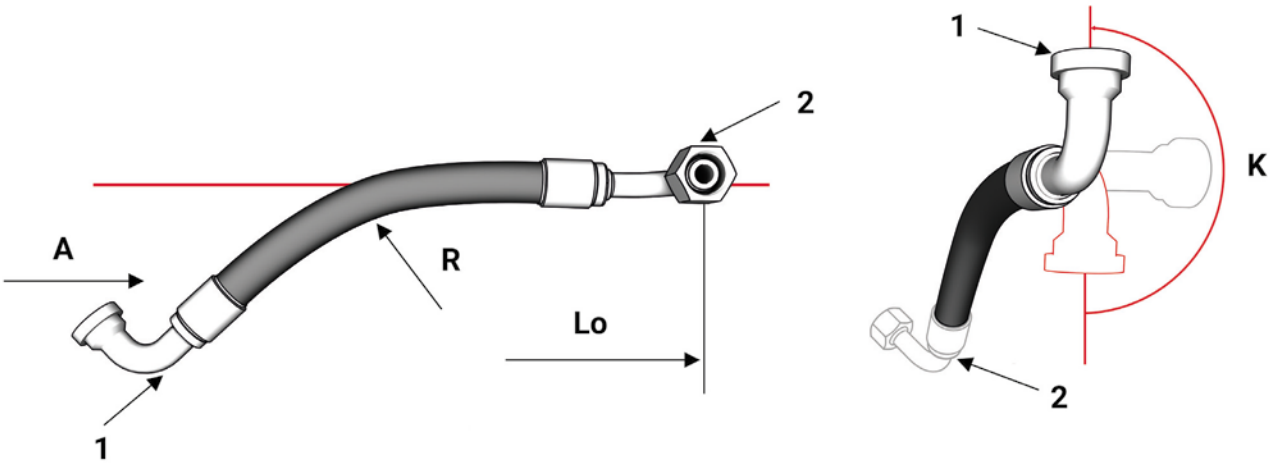

Figure 4

Offset angle K of the front, first-mentioned fitting

The V-angle of the second-mentioned fitting is given relative to the first-mentioned fitting.
The designation of the offset angle of the second elbow fitting is arrived at by viewing the first-mentioned elbow fitting again from the front with it pointing downwards and measuring the offset angle V of the rear elbow fitting counterclockwise.

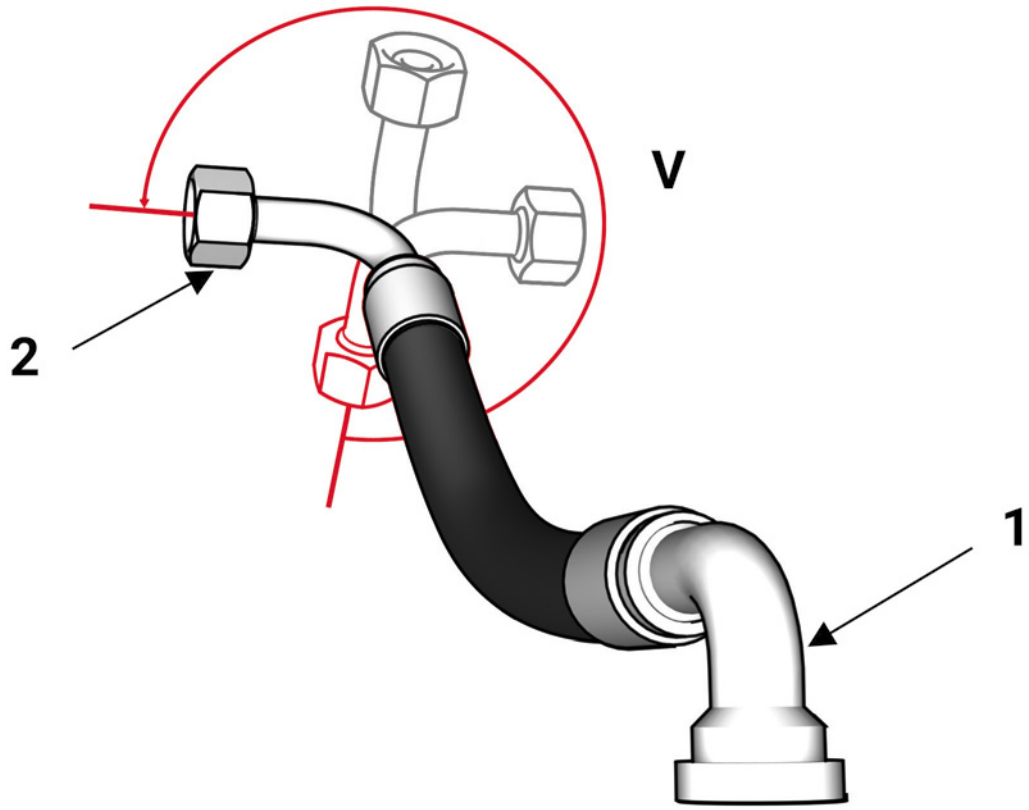

Figure 5

Offset angle V of the rear, second-mentioned fitting
Legend:
1 First-mentioned hose fitting PN20SF90
2 Second-mentioned hose fitting PN20AOS90
A Direction of view **(always onto the first-mentioned fitting)**
R Natural curvature of the hose
K Offset angle of the front fitting measured counterclockwise, in this case 180°
V Offset angle, measured counterclockwise, in this case 270°
LO Length of the hose line

Figure 4 + 5: Designation of a hose line HD220: **PHD220 x 1000 SF90 AOS90 K180 V270**

Example 5 (K-angle and V-angle): Another hose line with two elbow fittings and two offset angles

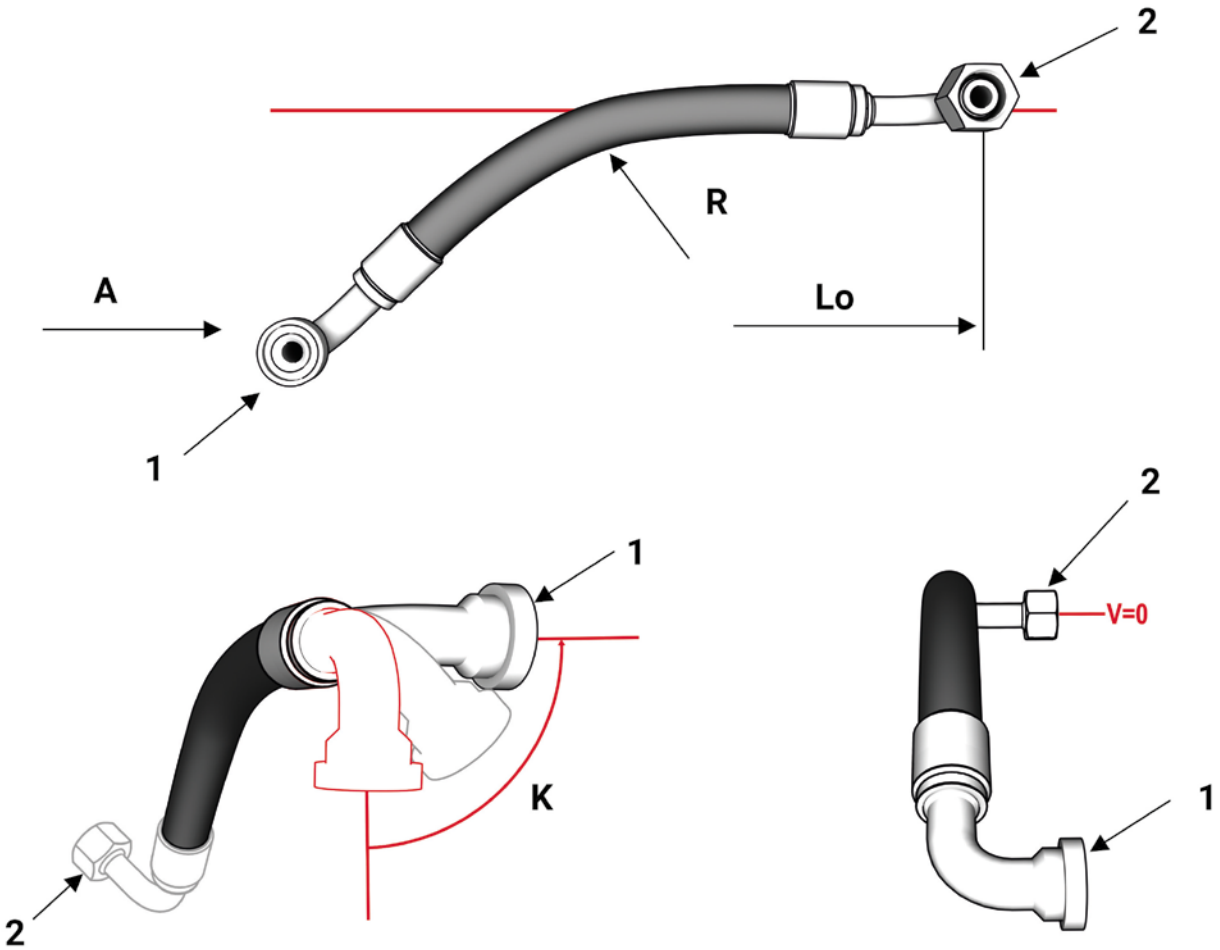

Figure 6

Legend:
1 First-mentioned hose fitting PN20SF90
2 Second-mentioned hose fitting PN20AOS90
A Direction of view **(always onto the first-mentioned fitting)**
R Natural curvature of the hose
K Offset angle of the front fitting measured counterclockwise, in this case 90°
V Offset angle, measured counterclockwise, in this case 0°
LO Length of the hose line

Figure 6: Designation of a hose line HD220: **PHD220 x 1000 SF90 AOS90 K90 V0**